Int J Adv Manuf Technol (2008) 38:536–542
DOI 10.1007/s00170-007-1024-x

ORIGINAL PAPER

Development of autonomous mobile robot with manipulator for manufacturing environment

S. Datta · R. Ray · D. Banerji

Received: 10 January 2007 / Accepted: 22 March 2007 / Published online: 23 May 2007
© Springer-Verlag London Limited 2007

Abstract This paper describes the developmental effort involved in prototyping the first indigenous autonomous mobile robot, AMR, with a manipulator for carrying out tasks related to manufacturing. The objective is to design and develop a vehicle that can navigate autonomously and transport jobs and tools in a manufacturing environment. Proprioceptive and exteroceptive sensors are mounted on AMR for navigation. Among the exteroceptive sensors, a stereovision camera is mounted in front of AMR for mobile robot perception of the environment. Using the widely supported JPEG image file format, full high-resolution color images are transmitted frame by frame from the mobile robot to multiple viewers located within the robot work area, where fast reconstruction of these images enables remote viewing. A CMOS camera mounted on the manipulator identifies jobs for pick-and-place operation. A variation of correlation based adaptive predictive search (CAPS) method, a fast search algorithm in template matching, is used for job identification. The CAPS method justifiably selects a set of search steps rather than consecutive point-to-point search for faster job identification. Search steps, i.e., either coarse search or fine search, are selected by calculating the correlation coefficient between template and the image. Adaptive thresholding is used for image segmentation for parametric calculations required for proper gripping of the object. Communication with the external world allowing remote operation is maintained through wireless connectivity. It is shown that autonomous navigation requires synchronization of different processes in a distributed architecture, while concurrently maintaining the integrity of the network.

Keywords Mobile robot · Autonomous navigation · Manufacturing environment · Distributed architecture · AMR

S. Datta (✉) · R. Ray · D. Banerji
Robotics & Automation, Central Mechanical Engineering Research Institute, M.G. Avenue,
Durgapur, West Bengal 713209, India
e-mail: sdatta@cmeri.res.in

R. Ray
e-mail: ranjitray@cmeri.res.in

D. Banerji
e-mail: dbanerji@cmeri.res.in

1 Introduction

Autonomous mobile robots are becoming an integral part of flexible manufacturing systems designed for material transport, cleaning, and assembly purpose. The advantage of this type of robot is that the existing manufacturing environment does not have to be altered or modified as in the case of conventional AGVs where permanent cable layouts or markers are required for navigation. These robots are also used extensively for survey, inspection, surveillance, bomb and mine disposal, underwater inspection, and space robotics. This paper describes the indigenous effort in prototyping India's first autonomous mobile robot, AMR, with a manipulator for transporting jobs and tools in a manufacturing environment.

2 Physical description and design specification

Worldwide, efforts are being made to use autonomous mobile robots to relieve human operators of tedious, repetitive, and hazardous tasks. One such area where mobile robots are used for supplementing human tasks is in manufacturing. The University of Massachusetts in Amherst is developing a

mobile robot with a comprehensive suite of sensors that includes LRF and vision along with a dexterous manipulator, as mobility extends the workspace of the manipulator by permitting the robot to be operated in unstructured environments [5]. The Bundeswehr University in Munich is developing vision-guided intelligent robots for automating manufacturing, materials handling, and services, where vision-guided mobile robots *ATHENE I* and *II* navigate in structured environments based on the recognition of its current situation and a manipulator handles various objects using a stereo-vision system [1].

In India, mobile robots are being developed in some research institutes in collaboration with academic institutes and private sectors. One such mobile robot is the SmartNav, designed and built by Zenn Systems, Ahmedabad, in collaboration with IIT, Kanpur, and BARC [10].

Our mobile robot, AMR, also consists of a vehicle with a battery bank and a fleet of sensors, but it is autonomous and has a manipulator, which is required in a manufacturing environment for material handling.

The physical dimension of AMR is 1,260 mm (L) × 955 mm (W) × 625 mm (H) and the chassis is made of aluminum channel IS: 3921-1986. The entire structure is wrapped with 3-mm aluminum sheets, bent to proper shape and joined together using argon welding. The structure is powder coated to ensure proper aesthetics as well as environment toughness. The absence of any screw or rivet ensures a very rigid structure with the required mechanical strength. Internal braces that compartmentalize the robot interior ensure additional strength. Couplers are used to ensure minimal transverse load on the motor shafts and bearings.

The main load-bearing frame rests on two wheels and castors. The wheels are made of aluminum hubs 397 mm in diameter with rubber tires 69.73 mm wide. As proper dimension of the wheels determines accuracy and performance of the robot, the wheel hub and wheel cap are designed to allow changes of the tires in case they wear out. Further, to avoid slippage, the tire profile is designed to ensure that the contact points of the wheel with the ground are maintained under various turning conditions.

There are three compartments inside AMR. The central compartment houses four 12-V dry-type sealed lead acid batteries that generate 48 V basic power supply. The rear compartment houses the motor controller and the drivers, the main micro-controller board, and the power-conditioning circuits as well as the sonar modulator and switching circuitry, two single board PC 104+ computers (SBCs), and the manipulator controller box. The front compartment houses the two Maxon motors of 48 V, 250 W each along with the SICK laser range finder (LRF) and Intelitek's Scorbot-ER-4u manipulator, which is mounted in front of AMR. The total weight of the system is around 125 kg and the payload of the system is around 25 kg. AMR's speed is 40 m/min with a mission time of 1 h. The distribution of the weight ensures proper traction and stability during robot motion. As shown in Fig. 1, an array of 16 bumper switches and Polaroid's 24 ultrasonic sensors circumscribe AMR and a BumbleBee stereovision camera is mounted in front of AMR to capture the navigation scene. Power distribution to various equipment is shown in Fig. 2, which enables the AMR to be operationally fully loaded for 1 h. The manipulator runs on 220 V AC. Hence a DC/AC converter is placed to convert 48 V DC to 220 V AC.

Fig. 1 AMR with manipulator

The AMR comes in two configurations: in the three-wheeled configuration, the two front wheels are the driving wheels and the rear wheel is of a castor-type. In the four-wheeled configuration, one castor is in the front and one

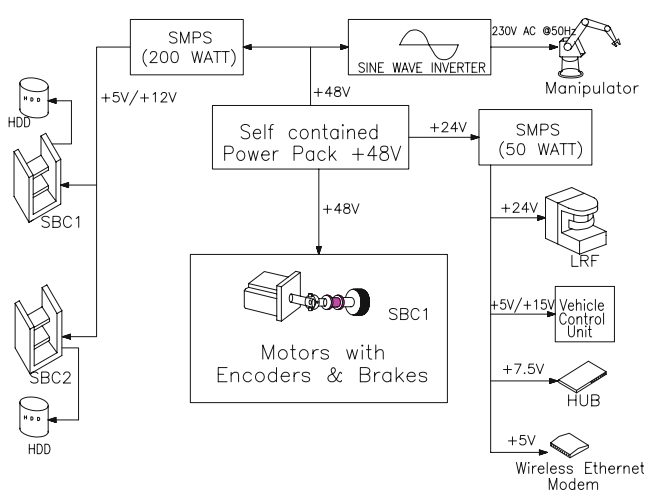

Fig. 2 Power distribution of the AMR

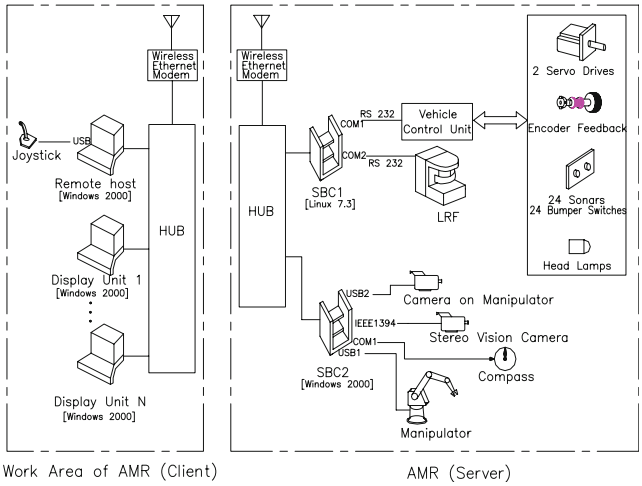

Fig. 3 Architecture of the AMR

castor is in the rear, and the two driving wheels are in the center. All the wheels are mounted with the vehicle body with suitably designed suspension system. The design is flexible enough to convert from one configuration to another without affecting the stability of the system.

3 AMR architecture

Navigation of AMR stands on a distributed architecture comprising two SBCs, residing inside AMR. The work area of AMR consists of a remote host with a joystick and multiple display units. Figure 3 shows the AMR architecture.

The SBCs are PC104 and PC 104+ compatible motherboard with a Celeron processor running at 400 MHz. The motherboard has a built-in 10/100 BaseT Ethernet card and supports 128 MB RAM, a 40 GB hard disk and a compact flash card of 1 GB. Each SBC has two USB ports, one RS-232 serial port and one RS232/485 port. Each SBC requires only a single 5-V supply, although the harddrive needs an additional 12 V supply. SBC1 runs on Linux 7.3, whereas SBC2 runs on the Windows 2000 platform.

The SBCs inside AMR are physically connected over Ethernet but AMR communicates with the outside world through Wireless Access Point, using a 802.11 b protocol.

The navigational algorithm resides in the remote host which communicates with the SBCs. The display units display the work area during vehicle navigation, as grabbed by the stereo-vision camera mounted in front of AMR.

3.1 Vehicle control unit

A vehicle control unit is the heart of AMR, which is detailed in a block diagram as given in Fig. 4. The micro-controller-based main board controls the motors, monitors the battery voltage of AMR, takes inputs from sonars and

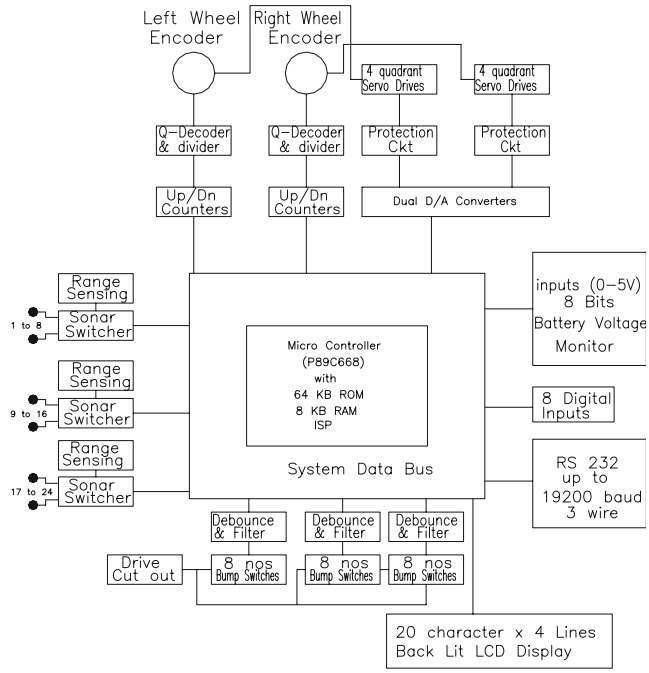

Fig. 4 Block diagram of vehicle control unit

bumper switches, and wheel encoders and maintains serial communication with SBC1. The micro-controller features 64 Kbytes of on-chip flash program memory and 8 Kbytes of on-chip RAM. It provides 32 bi-directional I/O lines. The two main motors are driven through two DC servo-amplifiers, EPOS 70/10, from Maxon Motor AG, Switzerland. These take 11–70 V DC inputs as the reference that set the motor speeds. On-board dual 12-bit D/A converters provide the servo-amplifiers with the necessary inputs at the required resolution for effective control of AMR's motion. Thus, the micro-controller can set each wheel's rotation speed independently by writing to the relevant port to implement a turn or change AMR's acceleration. Motive power is provided by two graphite-brushed, 24-VDC, 250-W servo motors that have integrated high-efficiency planetary gears with a 93:1 gear ratio. These provide each wheel with a torque of 35 Nm at 32.3 rpm. The motors have integrated incremental shaft encoders with 500 counts

Fig. 5 Firing sequence of AMR sonars

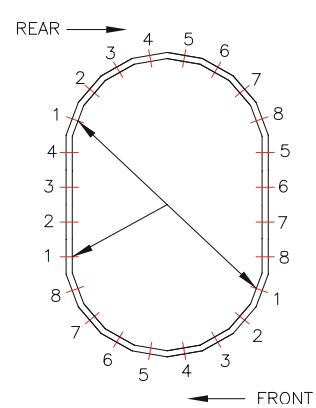

per turn that give necessary feedback to both the servo-amplifiers and the micro-controller. While the servo-amplifiers maintain the required speed using the encoder feedback, the micro-controller uses the same feedback through its internal counters to keep track of motor velocities and position for total motion control.

Moreover, the I/O port of the vehicle control unit takes input from 16 bumper switches and 24 sonars. There are eight sonar arrays both in front and rear and four on each side providing 360 degrees of nearly seamless sensing. The sonars provide range information and based on the placement of the sonars, provide bearing information. One modulator board, the Polaroid series 6500, is used to interface all the eight sonar transducers in the front, one for all the rear sonars, and one for the side sonars. The modules interface to the main board through the I/O lines. Cyclic excitation of sonars is maintained starting with sonar 1 from the front array, sonar 1 from the side array and sonar 1 from the rear array, which are fired simultaneously. Sonar configuration and firing scheme of AMR is shown in Fig. 5. The switching time is on the order of 40 ms, resulting in all transducers being scanned within 320 ms as three are switched simultaneously. The sonar range is 150 mm to 10 m, with an accuracy of ±0.1%.

3.2 LRF, manipulator, and camera interface

LRF, mounted on AMR, provides more accurate mapping for reliable navigation. LRF runs on 24 V DC and has a range of up to 8 m with a resolution of 10 mm and a scanning angle of 180°. The LRF communicates directly with the SBC1 through its serial port with RS-232 protocol at 38.4 Kbaud, as shown in Fig. 3. The manipulator and the CMOS camera mounted on the manipulator communicate with SBC2 through USB port1 and USB port2, respectively. The compass communicates through COM1 of SBC2 while the stereovision camera communicates with SBC2 over the IEEE-1394 interface.

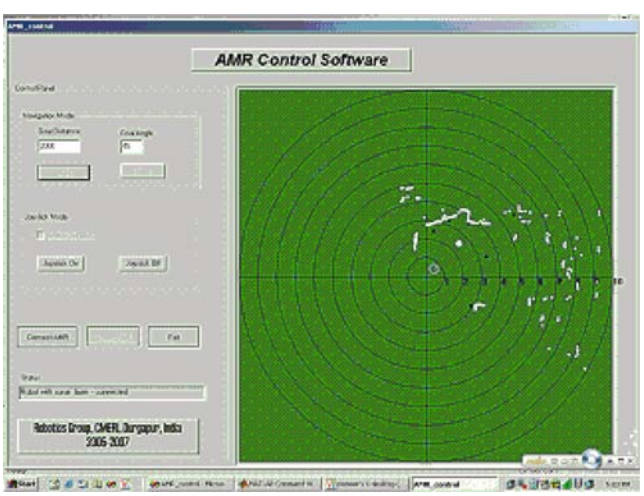

Fig. 6 AMR GUI showing laser-based map of navigational work area

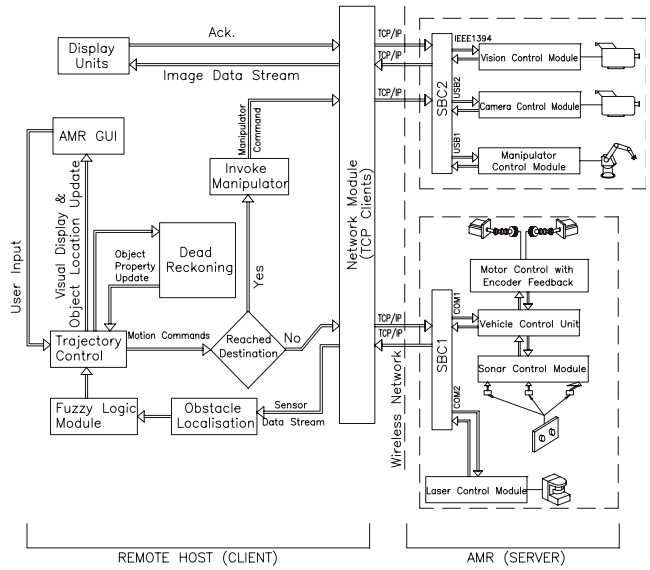

Fig. 7 AMR software architecture

3.3 Communication between AMR and remote host

SBC1 of AMR, acting as the server, is set in the listening mode with COM1 for vehicle control unit and COM2 for the laser as shown in Fig. 3. The navigational algorithm of the whole mission resides in the remote host. During the initialization phase, the remote host, acting as the client, binds with the server for communicating with the vehicle control unit and the laser. The AMR Operating System (AMROS) resides in the vehicle control unit (i.e., in the micro-controller flash memory) and supervises motor feedback and keeps track of robot position, orientation, and overall robot velocity, acceleration, and angle of turn, etc. The idea being that high level software residing in the remote host will issue these commands in order to perform end-level application tasks. Remote host controls the AMR through AMR GUI, shown in Fig. 6.

Hence, for autonomous navigation, COM1 is used for sending motion commands, incorporated in the navigational algorithm, to the vehicle control unit and for receiving sonar, encoder data, and other parametric and status data feedback from the vehicle. Figure 7 shows the AMR software architecture.

The data to and from the host is sent in packets. On powering up the AMR, AMROS activates all onboard hardware and awaits an initiation packet from the remote host. Once the connection is initiated, the host sends a packet at least every 100 ms to ensure that connectivity is maintained. Similarly, the server sends a packet back to the host every 100 ms. Failing this, the application program assumes loss of contact and initiates a reconnection or exits the application. Data packets typically consist of low-level commands [10].

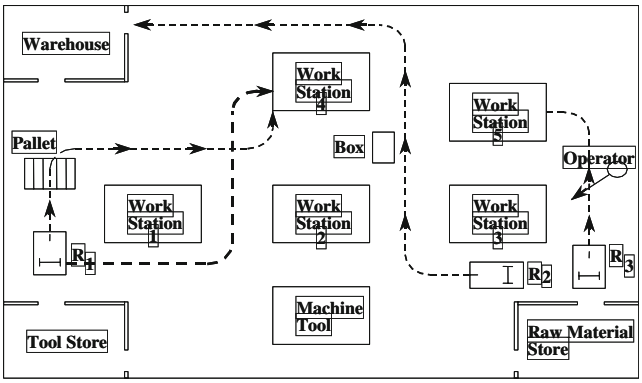

Fig. 8 Workspace of AMR

Similarly, COM2 is used for laser commands from the host and laser data feedback from AMR as shown in Fig. 7.

As is shown in Fig. 7, SBC2 of AMR also acts as a server for manipulator control with USB port 1 connected to the manipulator and USB port 2 connected to the CMOS camera mounted on the manipulator. Once AMR reaches the given workstation, the remote host activates SBC2 to carry on with manipulator pick and place operation. During navigation, a Bumblebee stereovision camera, mounted in front of AMR and connected through IEEE-1394 interface for image transmission from SBC2, continuously sends images of the navigation scene to the display units so that the operator can monitor the vehicle remotely, and in case of emergency, can stop the vehicle in its tracks.

The remote host also has a joystick mode for added flexibility. The operator can use the 2 DOF joystick attached to the USB port of the remote host to maneuver the robot with ease. The operator can always switch between autonomous mode and joystick mode either to retrieve AMR after a mission or after aborting a mission for emergency reasons. He can also bring the AMR back for recharging or set it at a desired location to start a mission.

3.3.1 JPEG image transfer from AMR to image display units over WLAN

Reliable transmission and reception of images is imperative for mobile robot perception. Most transmission schemes take advantage of the popular JPEG image format [11, 13] as responsiveness gained from rapid image transmission is more important than perfect image fidelity, since images are already distorted by lossy compression and since relatively few images are closely examined. Robustness is therefore vital for rapid image transmission and reconstruction in a mobile robot network. Hence, we also take advantage of the most popular and widely supported JPEG image file format for transmitting full-color images of 1024×768 resolution, as grabbed by a stereovision camera mounted in front of AMR, frame by frame from AMR to multiple clients over WLAN set at different monitoring points within AMR work area in a manufacturing environment and for reconstructing these images for viewing almost without any perceptible delay [4]. Thus, the operator can track the AMR and in case of emergency, can abort the mission.

4 AMR navigation

Given an a priori layout of the work area as shown in Fig. 8, AMR carries out its mission by navigating from one workstation to another, transporting jobs and tools in the order set by the operator. In case of any obstacle, AMR automatically bypasses the obstacle and reorients itself to reach its given destination. Localization is also an integral part of autonomous navigation as at every instant the vehicle should know where it is at with respect to its surrounding and how far it has traversed from its starting position and how far it needs to travel to reach its goal. This is where the role of exteroceptive sensors becomes dominant. As all proprioceptive sensors accrue errors due to slippage, inherent sensor bias etc., for accurate localization this data needs to be fused with comparable data from exteroceptive sensors, i.e., compass, GPS, and beacons. AMR's compass gives a better estimate of its orientation than obtained solely from encoder feedback.

4.1 Obstacle avoidance and AMR localization through map building

The objective of mobile robot localization with simultaneous map building is to enable a mobile robot to build a map of an unknown environment while concurrently using that map to localize itself. This is one of the important topics in the field of mobile robot navigation as this method allows a mobile robot to be deployed easily with very little preparation. The SICK laser rangefinder scans a semicircle

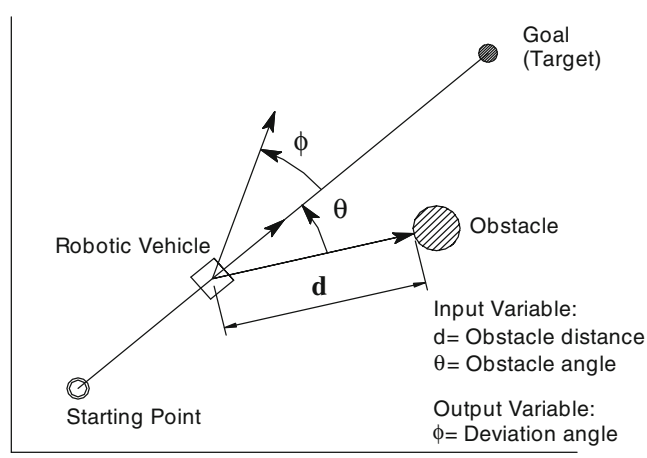

Fig. 9 Scheme for obstacle avoidance using a fuzzy logic controller

Fig. 10 Manipulator setup for material handling using template matching

at about 1 Hz and returns the range of the closest laser reflection within every degree. LRF is used to build the map of the workspace of AMR [3]. AMR localizes itself in that workspace during navigation by feature extraction algorithm. By examining typical scans of the laser range-finder, the desired features are segregated into small clusters. In order for the sensor data to be used by the map-building routine, the range and bearing of these small clusters are extracted. The feature extraction algorithm relies on the size of the clusters and the free space around them. The threshold is set to define how large the free space has to be around the cluster while it navigates through the workspace by avoiding obstacles [2].

Ultrasonic range finders are used for detecting obstacles by finding range and bearing of the obstacles. For safe and effective navigation, a fuzzy logic controller (FLC) is used for obstacle avoidance by detecting the most critical obstacle. In our case, the FLC is a two input, one output system. The antecedents are nearest obstacle distance and the obstacle angle from the robot. The FLC processes the obstacle data and finds out the angle by which the robot should deviate from its current trajectory, illustrated in Fig. 9. A Mamdani-type fuzzy inference engine is used for determining the deviation angle for avoiding the critical obstacle [6, 7].

5 AMR material handling system

AMR material handling system consists of an Intelitek's 5 DOF Scorbot-ER-4u manipulator with a CMOS camera, mounted on the wrist of the manipulator as shown in Fig. 10. Once the AMR navigates its way to the target workstation as depicted in Fig. 8, the manipulator routine is invoked. SBC2, acting as the server, turns on the control of the manipulator control box, which in turn activates the manipulator. The camera grabs the scene and a variation of correlation based adaptive predictive search (CAPS) method, a fast search algorithm in template matching, is used for job identification [12]. CAPS method justifiably selects a set of search steps rather than consecutive point-to-point search for faster job identification. Search steps, i.e., either coarse search or fine search, are selected by calculating the correlation coefficient between template and the image.

In our implementation, as the arm moves over the worktable, the camera scans the worktable. As it approaches the job, with each scan, using coarse search technique through pre-calculated vertical and horizontal steps, the correlation coefficient with respect to the stored template is determined to find out the tentative pose of job and transfer the pose information first with respect to camera and then with respect to manipulator base. Next the camera is moved to this position. When the correlation coefficient is greater than matching threshold value, which is based on the statistics of the template, through fine search technique actual pose of the job is calculated [4]. Manipulator gripper is then moved to that position for picking up the job.

Adaptive thresholding is used for dynamic image segmentation required for parametric calculation for proper gripping of the object. Using the gray-level distribution of an image, the neighborhood around the highest peak of the histogram is chosen as the threshold region. For real-time processing a variation of Otsu's method [9], which chooses the optimal thresholds by maximizing the between-class variance with a heuristic search method, is used in this region for adaptive thresholding [8]. Once the job is identified through parametric calculations, the gripper picks the job and puts it on the platform. In this way, the jobs are stacked on the vehicle and are transported to the next workstation where they are unloaded using reverse operation and AMR continues with its next mission.

6 Conclusion

To fabricate a vehicle, incorporating various equipments as described above and making sure that it is balanced, is a challenge by itself. In addition, special care is taken to prevent electro-magnetic interference amongst various sub-assemblies such as sonar subsystem, manipulator subsystem, motor-controllers, etc.

Moreover, as described above, autonomous navigation in an unstructured environment requires synchronization of different processes in a distributed architecture, while maintaining the integrity of the network. But this project also proves the advantages of a distributed architecture, which includes performing various complex tasks without any perceptible delay and safeguarding the total system

against major failure that may occur when the total burden rests on a single point of operation.

Overall, AMR's architecture is an open architecture with a user-friendly GUI, so that it can be deployed easily without worrying too much about its internal operations. This is particularly suitable in a shop floor or warehouse, where the operator can deploy it for material handling with minimal knowledge and preparation.

Acknowledgments The authors would like to thank the members of the project team on "Autonomous Mobile Robot under CSIR network project on Advanced Manufacturing Technology" for their help and support. The authors would like to express their sincere gratitude to the director of the institute for his assent in publishing this work.

References

1. Bischoff R, Volker G (1998) Vision-guided intelligent robots for automating manufacturing, materials handling and services. WESIC'98 Workshop on European Scientific and Industrial Collaboration on Promoting Advanced Technologies in Manufacturing, Girona, June
2. Csorba M (1997) Simultaneous localization and map building. PhD Thesis, Oxford University Robotics Research Group, Department of Engineering Science
3. Datta S, Banerji D, Mukherjee R (2006) Mobile robot localization with map building and obstacle avoidance for indoor navigation. IEEE International Conference on Industrial Technology (ICIT '06), Mumbai, December 15–17
4. Datta S, Ray R (2007) AMR vision system for perception and job identification in a manufacturing environment. Chapter 27 Int J Adv Robotic Syst. Special Issue on Vision Systems, April
5. Katz et al (2006) The UMass mobile manipulator uman: an experimental platform for autonomous mobile manipulation. Workshop on manipulation for human environments at robotics: science and systems. Philadelphia, USA, August
6. Klir GJ, Yuan B (1995) Fuzzy sets and fuzzy logic-theory and applications. Prentice Hall, Upper Saddle River, NJ
7. Kosko B (1991) Neural networks and fuzzy systems. Prentice Hall, Upper Saddle River, NJ
8. Liao P, Chen T, Chung P (2001) A fast algorithm for multilevel thresholding. J Inf Sci Eng 17:713–727
9. Otsu N (1979) A threshold selection method from gray-level histogram. SMC-9(1)62–66
10. Sen S, Taktawala PK, Pal PK (2004) Development of a range-sensing, indoor, mobile robot with wireless Ethernet connectivity. In: Shome SN (ed) Proc Nat Conf on Adv Manuf Robotics. ISBN 81-7764-671-0, CMERI, January 2004. Allied Publishers Pvt. Ltd., Durgapur, pp 3–10
11. Schaefer G (2001) JPEG image retrieval by simple operators. CBM '01, Brescia, Italy, September 19–21
12. Shijun S et al (2003) Fast template matching using correlation-based adaptive predictive search. Int J Imaging Technol 13:169–178, 2004
13. Wallace GK (1991) The JPEG still picture compression standard. Communications of the ACM 34(4):30–44